Platform Parts

INSTRUCTIONS

Datasheet no.
J33-261029

JRSN-2A07

Hall type Joystick

Dual-axis



(Photo for reference)

REFERENCE NUMBER	JRSN-2A07
OEM NUMBER	SN-3028852

1 DIMENSIONS (mm)

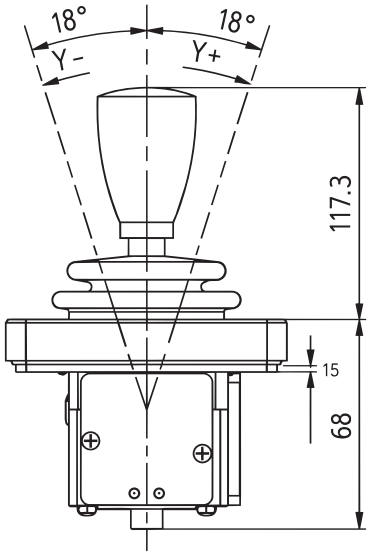

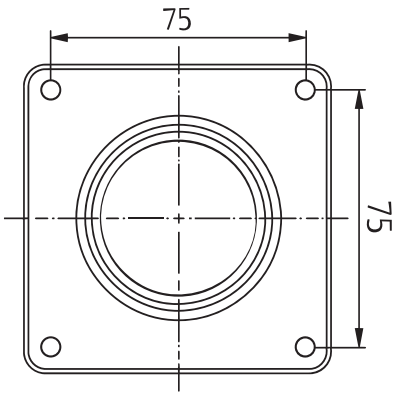

2 SPECIFICATIONS

TECHNICAL SPECIFICATIONS

Operating angle	±18°
Operating force	8-16N
Service life	3 million times
Weight	450g

ELECTRICAL SPECIFICATIONS

Sensor type	Hall Sensor
Supply voltage	9-32V
Supply current	<15mA(per channel)
Median voltage	2.5V±3%Vs

ENVIRONMENTAL SPECIFICATIONS

Operating temperature	-30°C ~ +70°C
Storage temperature	-40°C ~ +85°C
Protection rating	IP54

3 CONNECTIONS & INSTALLATION

HANDLE WIRING

PORT	COLOR	FUNCTION
1	Red	VCC (9-32V)
2	Black	GND
3	Yellow	Out 1 (X-axis)
4	Blue	Out 2 (Y-axis)

CONNECTORS

