Platform Parts

INSTRUCTIONS

Datasheet no.
J24-261029

JRDL-1A01

Hall type Joystick

Single-axis / Rocker Switch

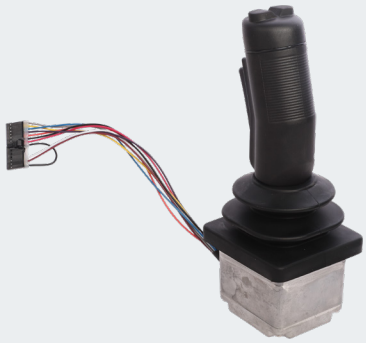

(Photo for reference)

REFERENCE NUMBER	JRDL-1A01
OEM NUMBER	DL-00000711

1 DIMENSIONS (mm)

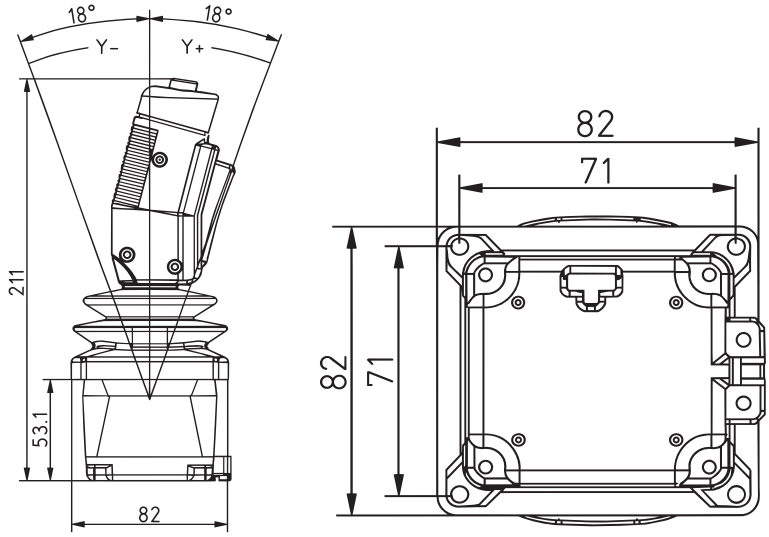

2 SPECIFICATIONS

TECHNICAL SPECIFICATIONS

Operating angle	±18°
Operating force	8-16N
Service life	5 million times
Weight	570g

ELECTRICAL SPECIFICATIONS

Sensor type	Hall Sensor
Supply voltage	5±0.5Vdc
Supply current	<12mA(per channel)
Median voltage	2V±2%Vs

ENVIRONMENTAL SPECIFICATIONS

Operating temperature	-30°C ~ +70°C
Storage temperature	-40°C ~ +85°C
Protection rating	IP54

3 CONNECTIONS & INSTALLATION

HANDLE WIRING

PORT	COLOR	FUNCTION
1	Grey	OUT 1
2	Yellow	OUT 2
3	Blue	Rocker Common
4	Purple	Deadman Switch
5	Orange	Deadman Switch
6	Black	Left Rocker Switch
7	Red	Right Rocker Switch
8	Black	Jumper Wire
9	-	-
10	-	-
11	-	-
12	White	VCC
13	Brown	GND
14	Black	Jumper Wire

CONNECTORS

