Platform Parts

INSTRUCTIONS

Datasheet no.
J3-261023

JRG-1A03

Hall type Joystick

Single-axis / Rocker Switch



(Photo for reference)

REFERENCE NUMBER	JRG-1A03
OEM NUMBER	GE-101005

1 DIMENSIONS (mm)

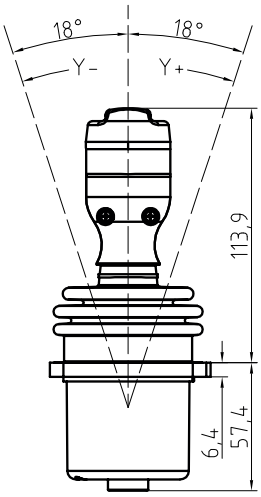

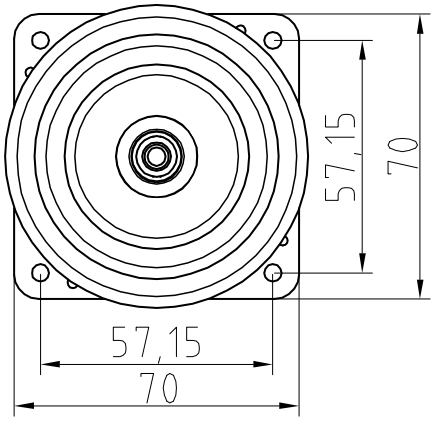

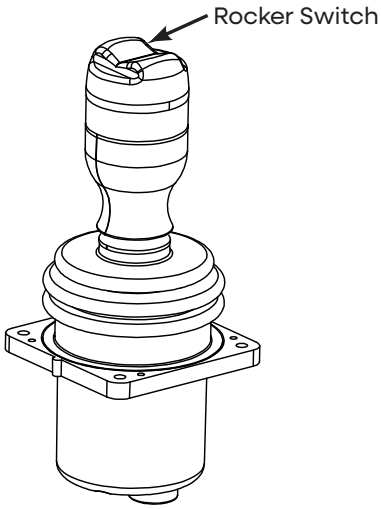

2 SPECIFICATIONS

TECHNICAL SPECIFICATIONS

Operating angle	±18°
Operating force	8~16N
Service life	2 million times
Weight	Approximately 600g

ELECTRICAL SPECIFICATIONS

Sensor type	Hall sensor
Supply voltage	5±0.5Vdc
Supply current	<16mA
Median voltage	2.5V

ENVIRONMENTAL SPECIFICATIONS

Operating temperature	-30°C ~ +70°C
Storage temperature	-40°C ~ +85°C
Protection rating	IP65

3 CONNECTIONS & INSTALLATION

HANDLE WIRING

PORT	COLOR	FUNCTION
1	Black	GND
2	Red	Vcc
3	-	-
4	Yellow	Y-out
5	Green	Toggle switch output