Platform Parts

INSTRUCTIONS

Datasheet no.
J23-261029

JRJL-1A20

Joystick

Single-axis



(Photo for reference)

REFERENCE NUMBER	JRJL-1A20
OEM NUMBER	JL-1600141

1 DIMENSIONS (mm)

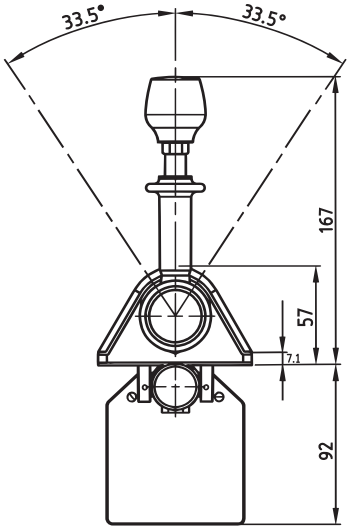

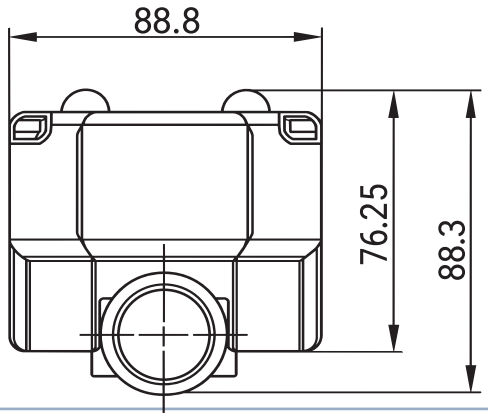

INSTALLATIONPANEL
CUT-OUT DIAGRAM

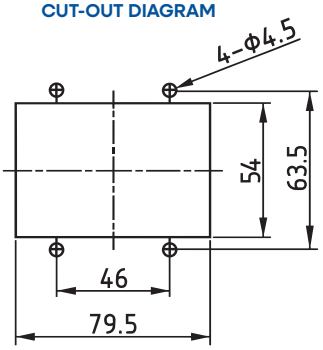

2 SPECIFICATIONS

TECHNICAL SPECIFICATIONS

Operating angle	±33.5°
Operating force	-
Service life	5 million times
Weight	650g

ELECTRICAL SPECIFICATIONS

Sensor type	Potentiometer
Supply voltage	12 Vdc
Supply current	250-450mA (standard) 250-650mA (high)
Median voltage	-

ENVIRONMENTAL SPECIFICATIONS

Operating temperature	-30°C ~ +70°C
Storage temperature	-40°C ~ +85°C
Protection rating	IP54

3 CONNECTIONS & INSTALLATION

HANDLE WIRING

PORT	COLOR	FUNCTION
1	Black	GND
2	Orange	AUX
3	Red	VCC
4	White	EOT
5	Green	PWM (A)
6	Yellow	PWM (B)
7	Grey	R (HI_EN)
8	-	-
9	-	-

CONNECTORS

