Platform Parts

INSTRUCTIONS

Datasheet no.
J29-261029

JRLG-1A01

Hall type Joystick

Single-axis / Rocker Switch



(Photo for reference)

REFERENCE NUMBER	JRLG-1A01
OEM NUMBER	LG-4130701351005

1 DIMENSIONS (mm)

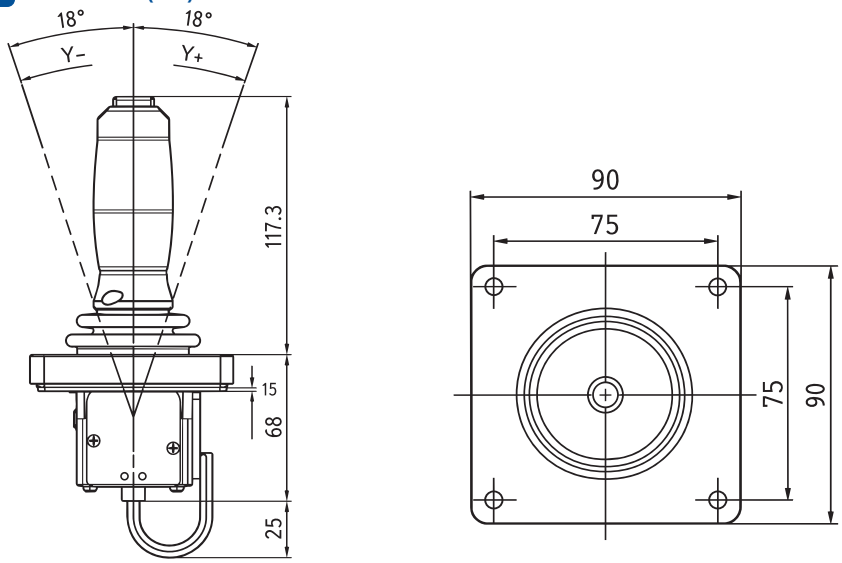

2 SPECIFICATIONS

TECHNICAL SPECIFICATIONS

Operating angle	±18°
Operating force	8-16N
Service life	2 million times
Weight	450g

ELECTRICAL SPECIFICATIONS

Sensor type	Hall Sensor
Supply voltage	5Vdc
Supply current	<16mA
Median voltage	2.5±0.1V

ENVIRONMENTAL SPECIFICATIONS

Operating temperature	-30°C ~ +70°C
Storage temperature	-40°C ~ +85°C
Protection rating	IP65 above the panel

3 CONNECTIONS & INSTALLATION

HANDLE WIRING

PORT	COLOR	FUNCTION
1	Blue	OUT (Y-axis output)
2	-	-
3	-	-
4	Pink	VCC (5V power supply)
5	-	-
6	Black	GND (0V ground)
7	-	-
8	-	-
9	Grey	Left Joystick Switch
10	Green	Right Joystick Switch
11	-	-
12	Purple	BTCOM (button common terminal)

CONNECTORS

