Platform Parts

INSTRUCTIONS

Datasheet no.
J4-261023

JRH-1A01

Joystick

Single-axis / Rocker Switch



(Photo for reference)

REFERENCE NUMBER	JRH-1A01
OEM NUMBER	HA-2901015000

1 DIMENSIONS (mm)

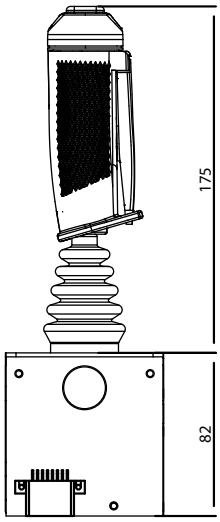

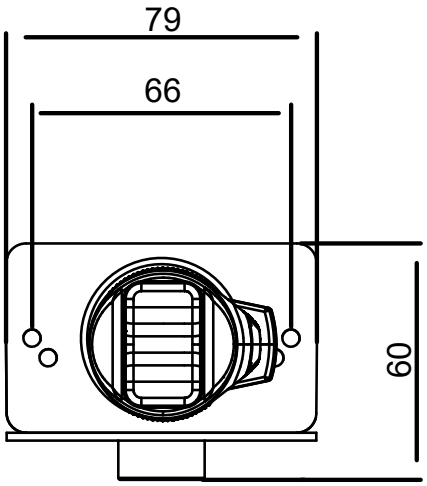

2 SPECIFICATIONS

TECHNICAL SPECIFICATIONS

Operating angle	±20°
Operating force	14N
Service life	2 million times
Weight	616g

ELECTRICAL SPECIFICATIONS

Sensor type	-
Supply voltage	5 Vdc
Supply current	4.6 F -2.5- 0.3 Vdc R
Median voltage	2.5 Vdc

ENVIRONMENTAL SPECIFICATIONS

Operating temperature	-30°C ~ +80°C
Storage temperature	-40°C ~ +85°C
Protection rating	IP65

3 CONNECTIONS & INSTALLATION

HANDLE WIRING

PORT	COLOR	FUNCTION
1	-	Rear Switch
3	-	Rocker RT
4	-	Enable
5	-	Enable
6	-	Rocker LT
9	-	Ground
10	-	SIG Output
11	-	+5 VDC
12	-	Central Tapping
13	-	Direction Switch Com
14	-	Front Switch
16	-	Handle Com

CONNECTORS

