Platform Parts

INSTRUCTIONS

Datasheet no.
J19-261124

JRH-1A02

Hall type Joystick

Single-axis / Rocker Switch



(Photo for reference)

REFERENCE NUMBER	JRH-1A02
OEM NUMBER	HA-2441305360

1 DIMENSIONS (mm)

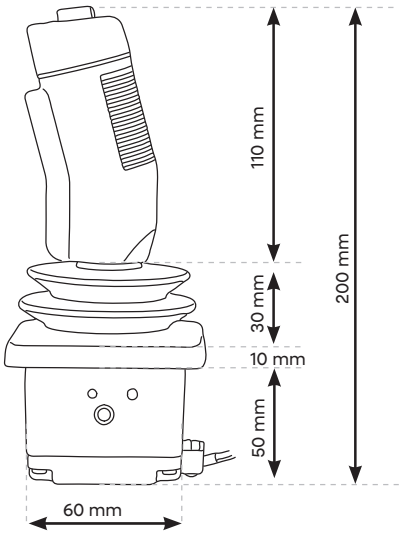

INSTALLATIONPANEL CUT-OUT DIAGRAM

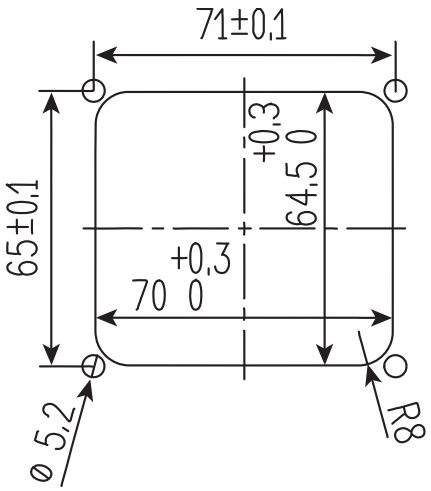

2 SPECIFICATIONS

TECHNICAL SPECIFICATIONS

Operating angle	± 20°
Operating force	≤20N
Service life	1 million times
Weight	500g

ELECTRICAL SPECIFICATIONS

Sensor type	Hall sensor
Supply voltage	9 - 36 Vdc
Supply current	0.5-2.5-4.5 Vdc
Median voltage	2.5V

ENVIRONMENTAL SPECIFICATIONS

Operating temperature	-30° ~ +70°
Storage temperature	-40° ~ +85°
Protection rating	IP65 (above the panel)

3 CONNECTIONS & INSTALLATION

HANDLE WIRING

PORT	COLOR	FUNCTION
1	Grey	Y OUT
2	Yellow & Black	Rocker Switch Left
3	White & Black	Rocker Switch COM
4	White	9-36 Vdc IN
5	Brown	0 V
6	Green	Medium Microswitch NO
7	Grey & Black	Rocker Switch Right