Platform Parts

INSTRUCTIONS

Datasheet no.
J8-261023

JBG-2A02

Hall type Joystick

Dual-axis



(Photo for reference)

REFERENCE NUMBER	JBG-2A02
OEM NUMBER	GE-101174

1 DIMENSIONS (mm)

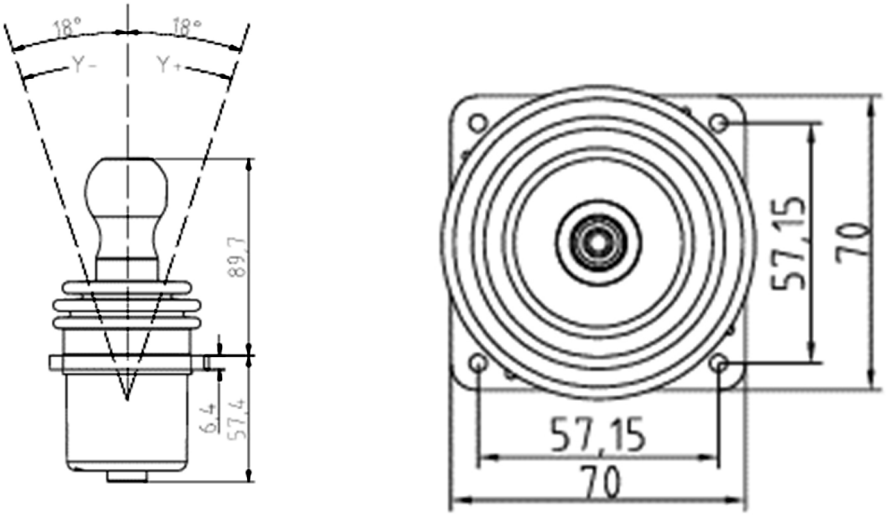

2 SPECIFICATIONS

TECHNICAL SPECIFICATIONS	
Operating angle	±18°
Operating force	8-16N
Service life	2 million times
Weight	600g

ELECTRICAL SPECIFICATIONS	
Sensor type	Hall sensor
Supply voltage	5±0.5Vdc
Supply current	<16mA
Median voltage	2.5V

ENVIRONMENTAL SPECIFICATIONS	
Operating temperature	-30°C ~ +70°C
Storage temperature	-40°C ~ +85°C
Protection rating	IP65

3 CONNECTIONS & INSTALLATION

HANDLE WIRING

PORT	COLOR	FUNCTION
1	Black	GND
2	Red	Vcc
3	Blue	X-out
4	Yellow	Y-out
5	-	-