Platform Parts

## INSTRUCTIONS

Datasheet no.
J32-261029

# JRM-2A02

Hall type Joystick

Dual-axis / Rocker Switch



(Photo for reference)

| | |
|---|---|
| **REFERENCE NUMBER** | JRM-2A02 |
| **OEM NUMBER** | MA-894573 |

## 1 DIMENSIONS (mm)

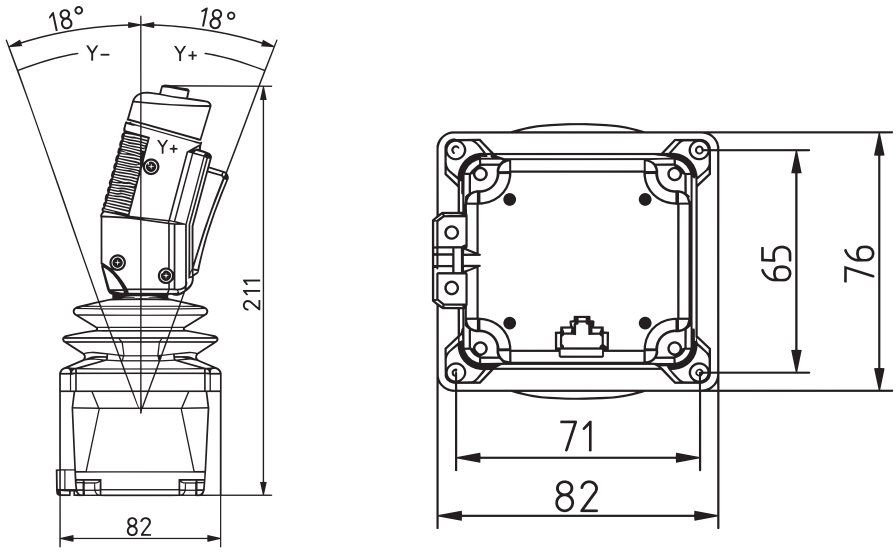


## 2 SPECIFICATIONS

### TECHNICAL SPECIFICATIONS

| | |
|---|---|
| **Operating angle** | ±18° |
| **Operating force** | 8-16N |
| **Service life** | 5 million times |
| **Weight** | 550g |

### ELECTRICAL SPECIFICATIONS

| | |
|---|---|
| **Sensor type** | Hall Sensor |
| **Supply voltage** | 9-32V |
| **Supply current** | <12mA(per channel) |
| **Median voltage** | - |

### ENVIRONMENTAL SPECIFICATIONS

| | |
|---|---|
| **Operating temperature** | -30°C ~ +70°C |
| **Storage temperature** | -40°C ~ +85°C |
| **Protection rating** | IP65 above the panel |

## 3 CONNECTIONS & INSTALLATION

### HANDLE WIRING

| PORT | COLOR | FUNCTION |
|---|---|---|
| 1 | Green | Deadman Switch OUT |
| 2 | Brown | GND |
| 3 | White | VCC |

| PORT | COLOR | FUNCTION |
|---|---|---|
| 1 | Yellow | X-axis output |
| 2 | Black | Left Racker Switch |
| 3 | Red | Right Racker Switch |
| 4 | Grey | Y-axis output |
| 5 | - | - |
| 6 | - | - |

### CONNECTORS

